rond x DE Oude SCHAKELAAR

floor box Ø60
installation instruction

1

heating system

isolation with technics

concrete workfloor

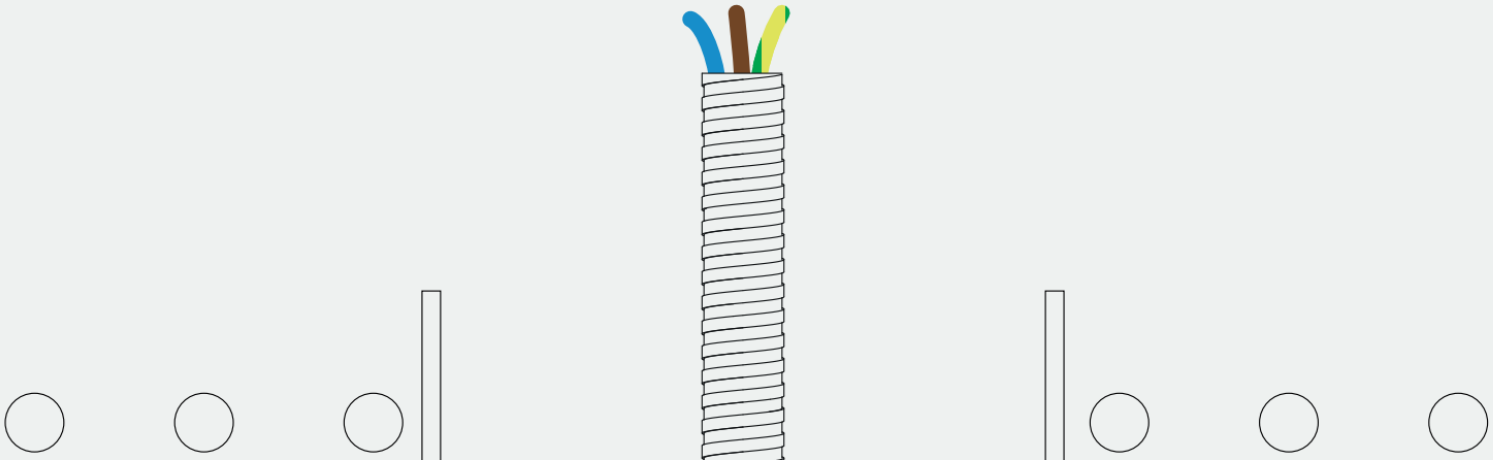

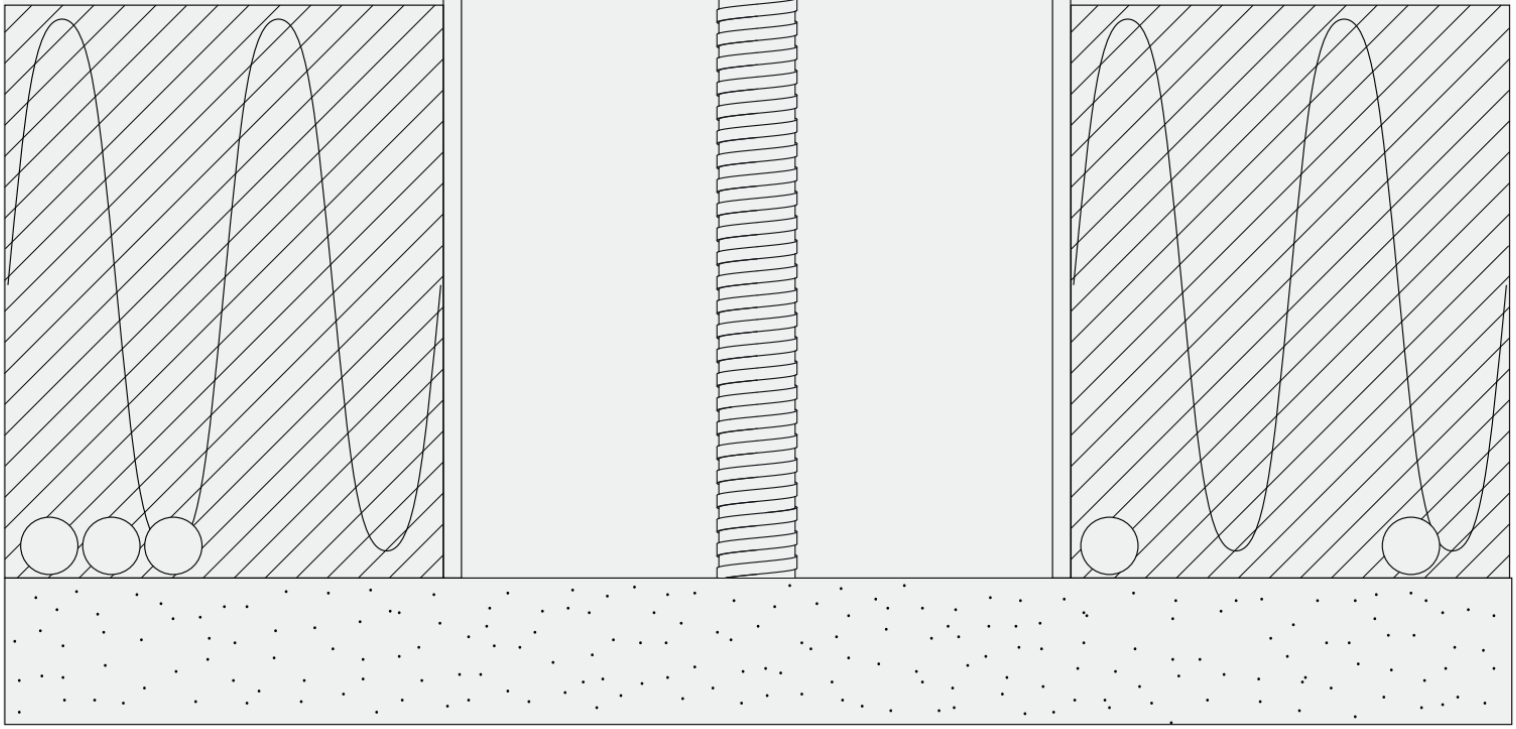

build up all floor layers except the top concrete layer.
leave an opening of at the location of the floor socket.

---

optional: floor box level support

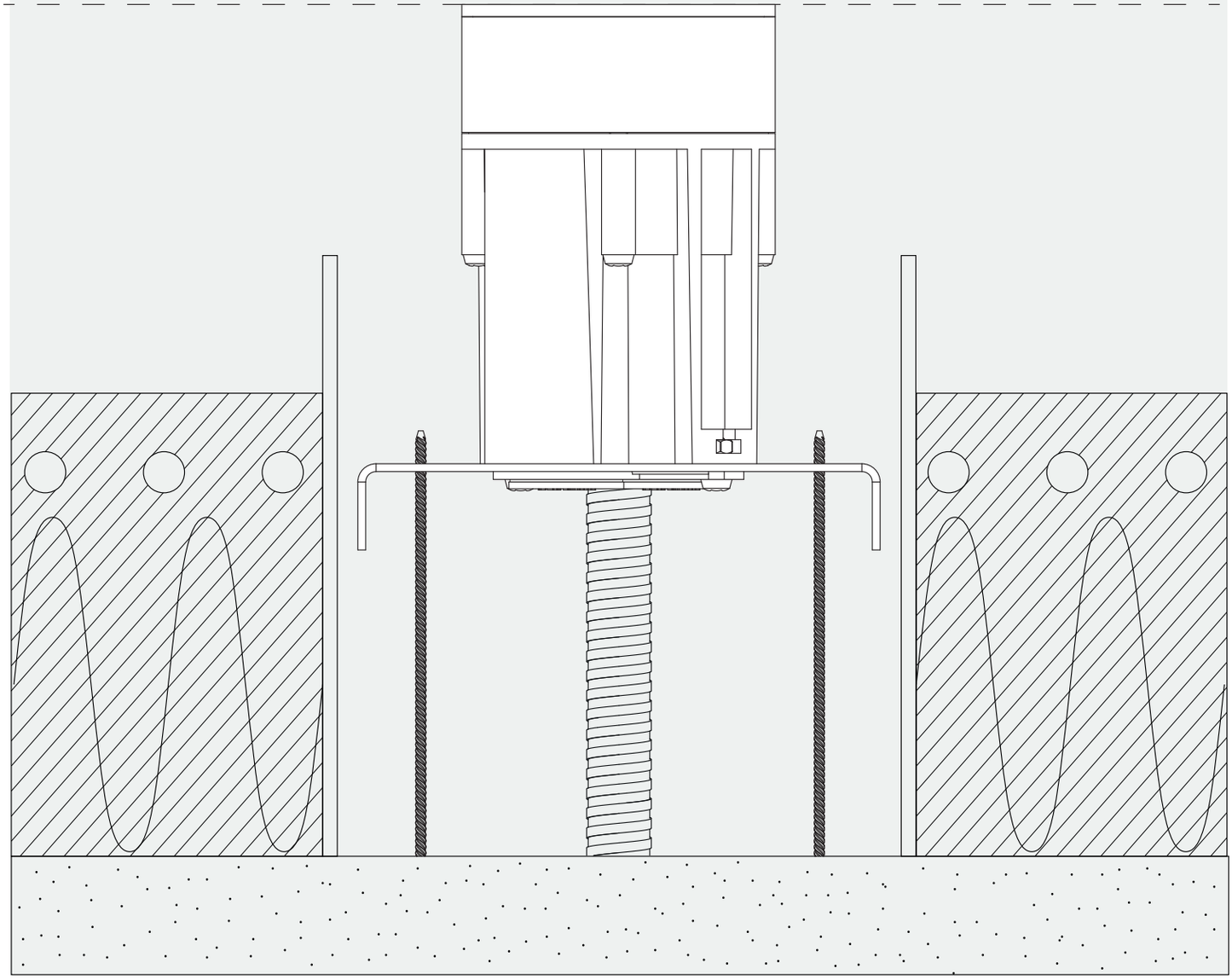

optional use floor box level support:

version	SKU	dimensions
single	8800-2525	100x100 mm
double	8800-2526	200x100 mm

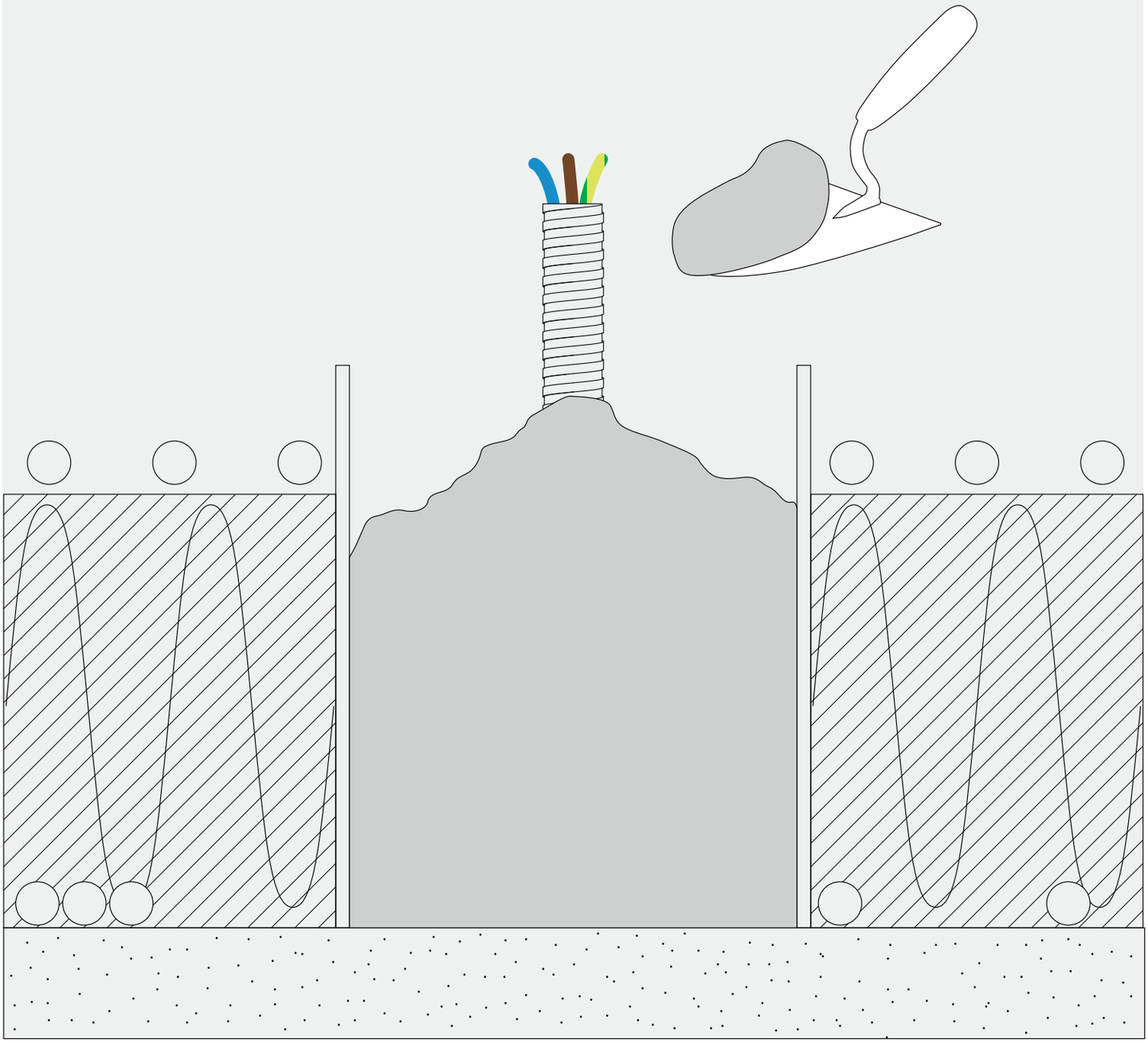

fill the hole with screed

3

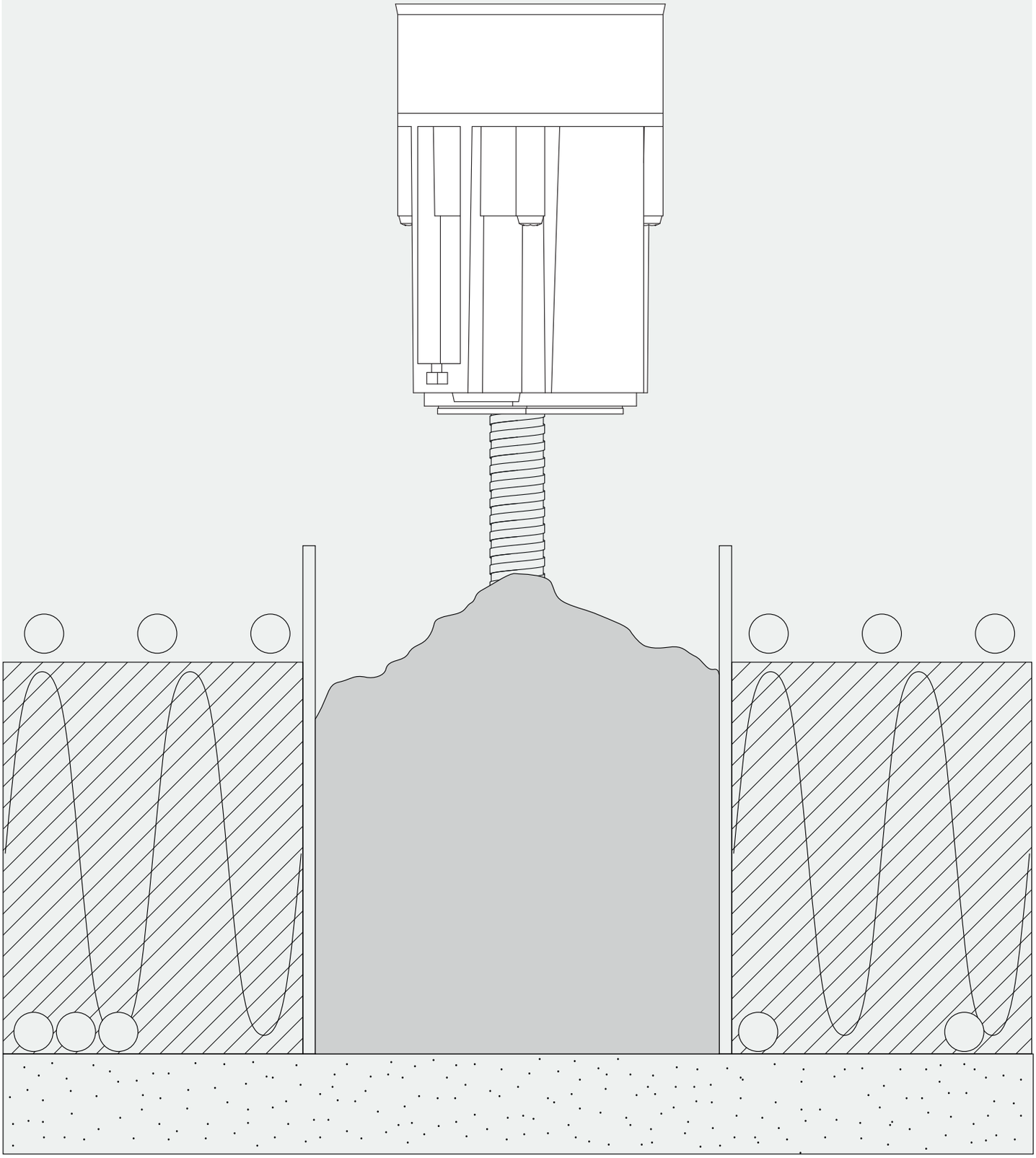

insert preflex in the floor box - cabling through bottom

4

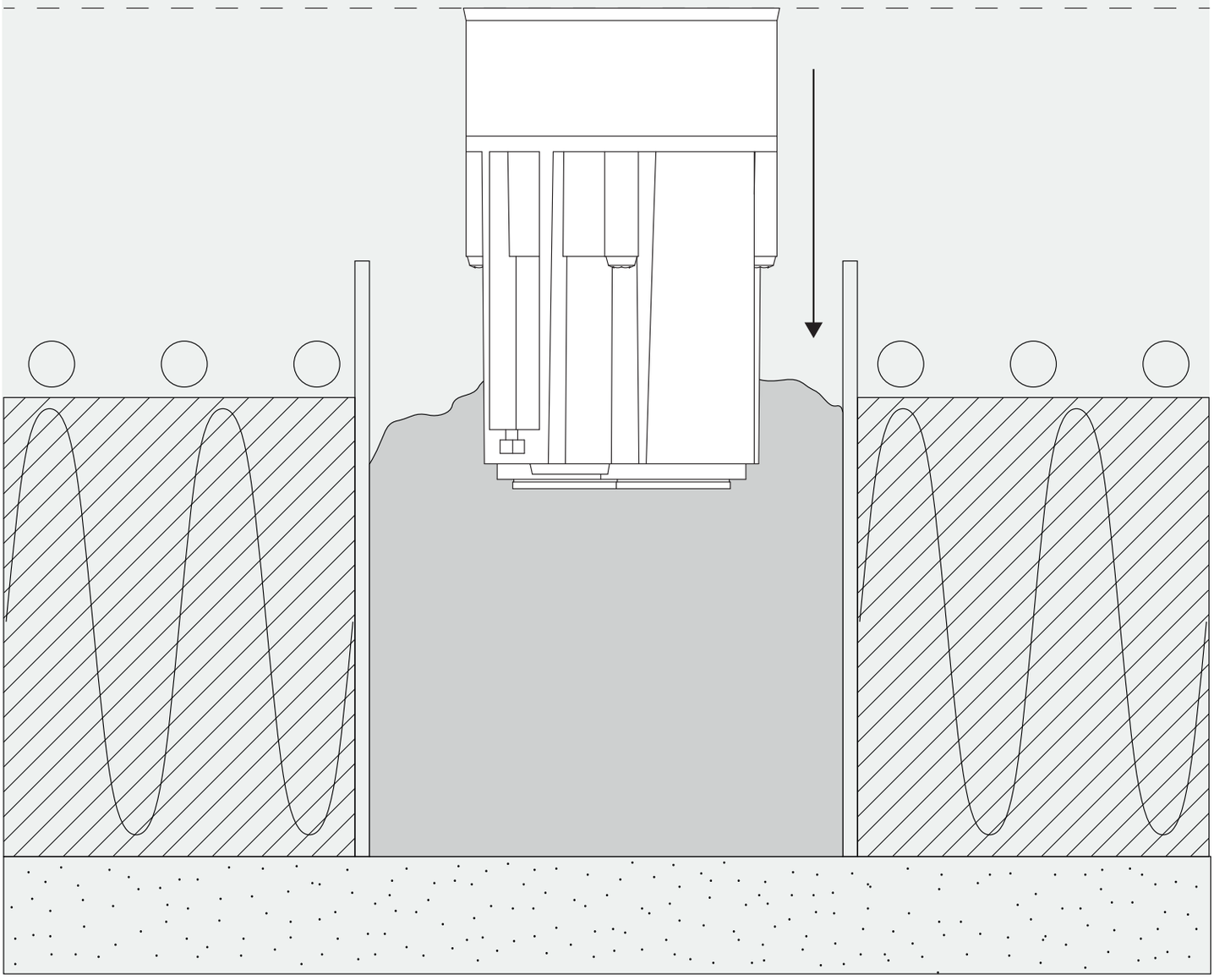

insert the floor box in the screed and level the top of the box

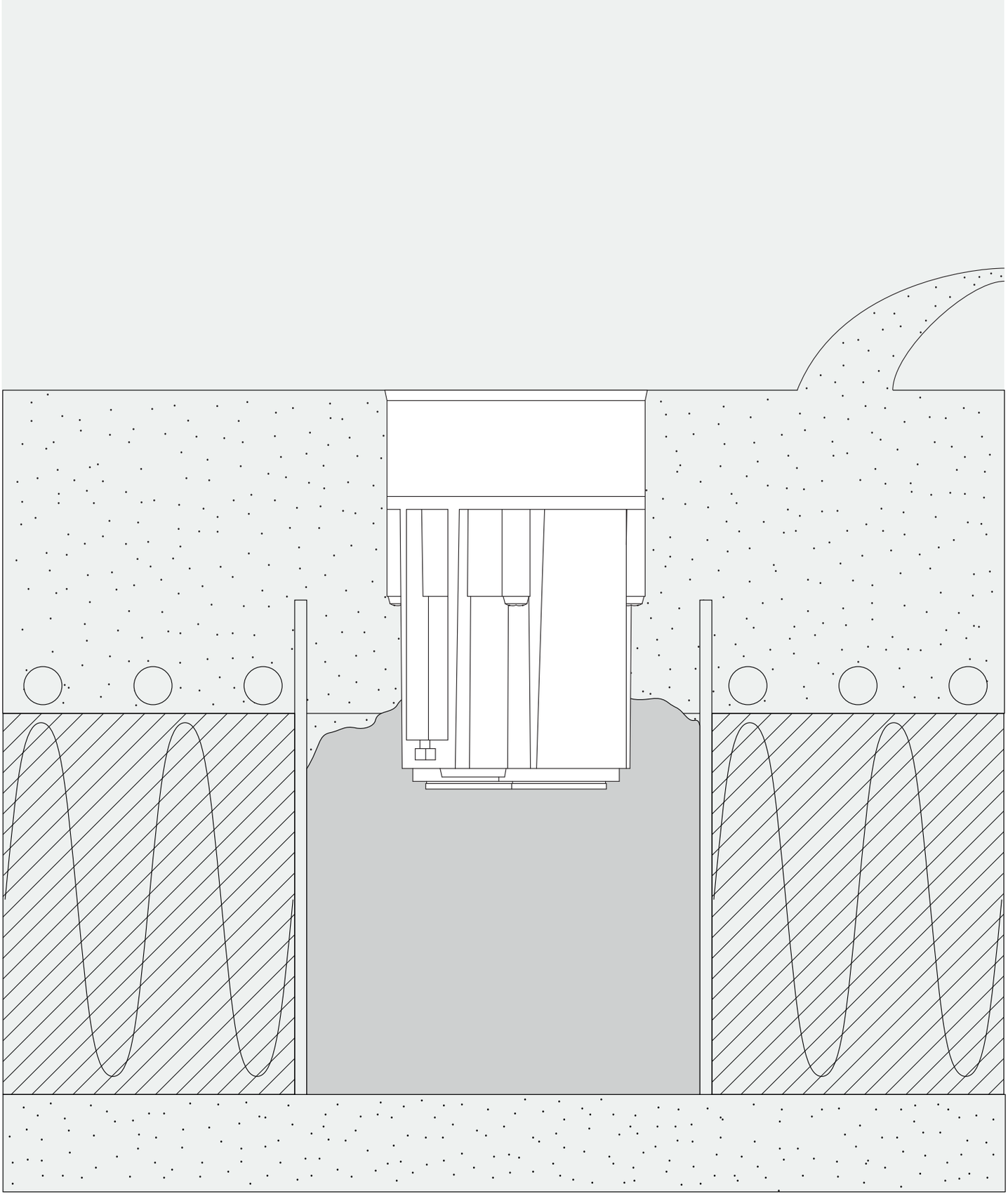

build up the final concrete layer

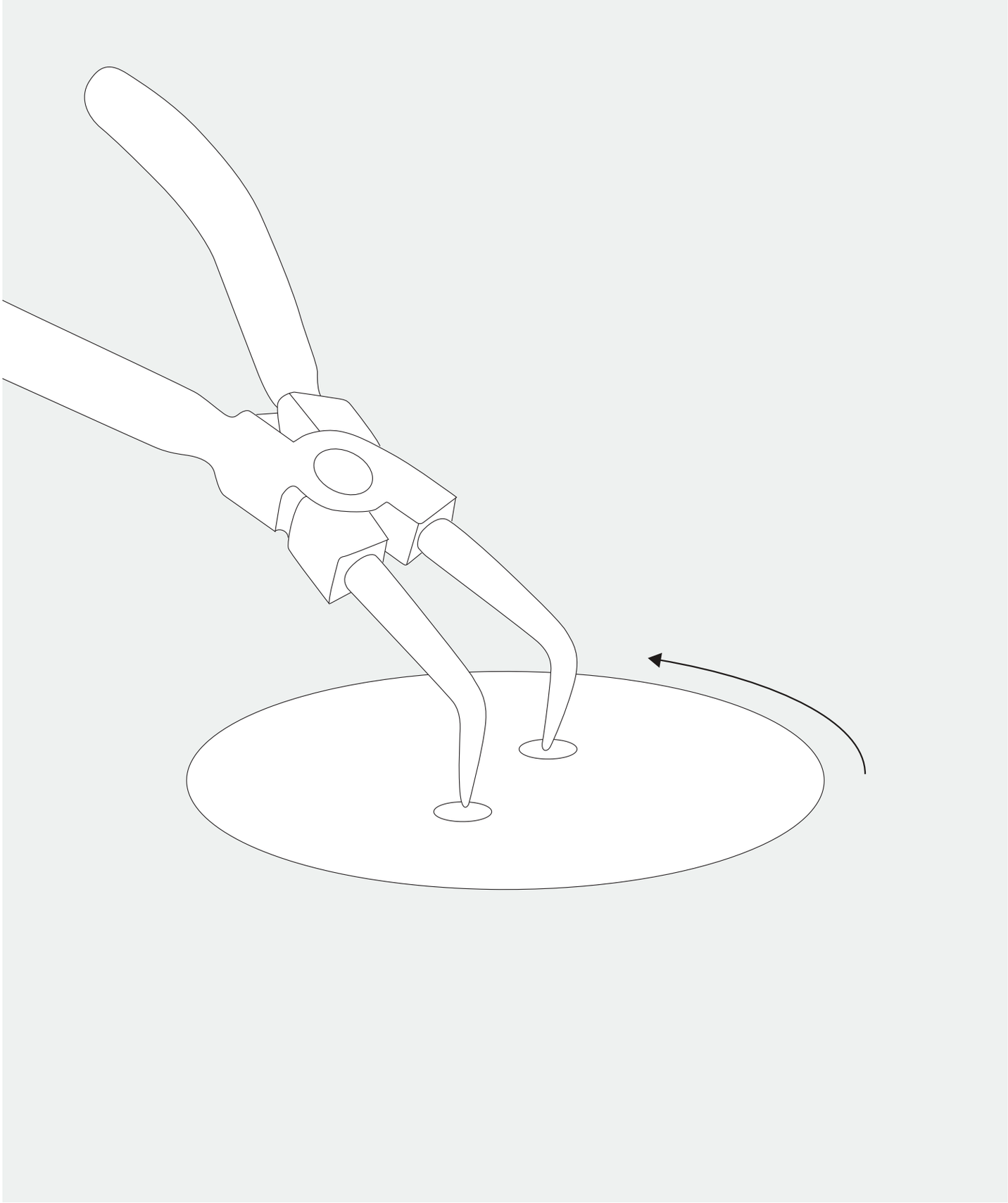

gently remove the plastic lid

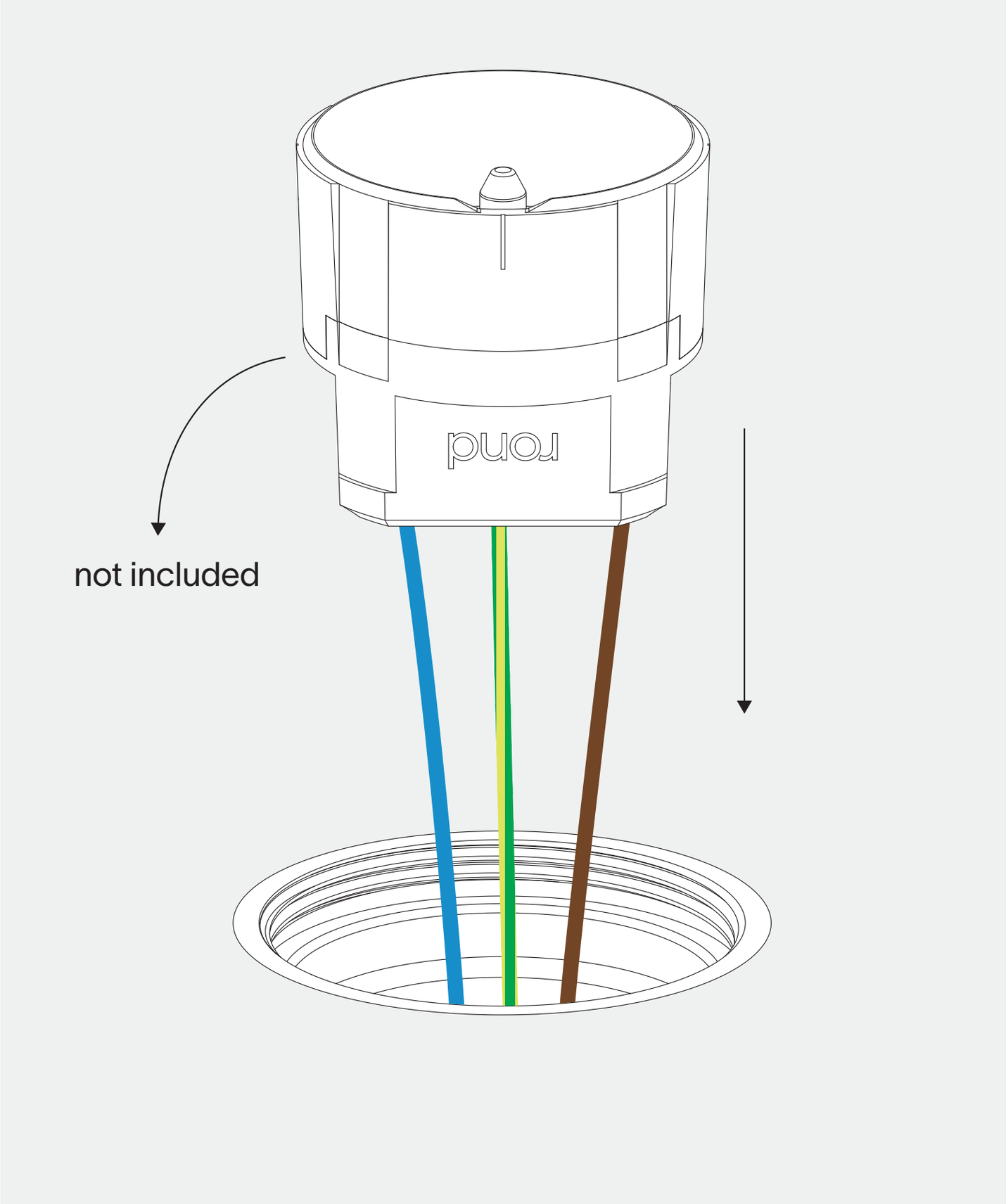

connect the socket (not included) and click it in the holder
compatible with **trimless** retro/easy/backfit type E/F socket modules

8

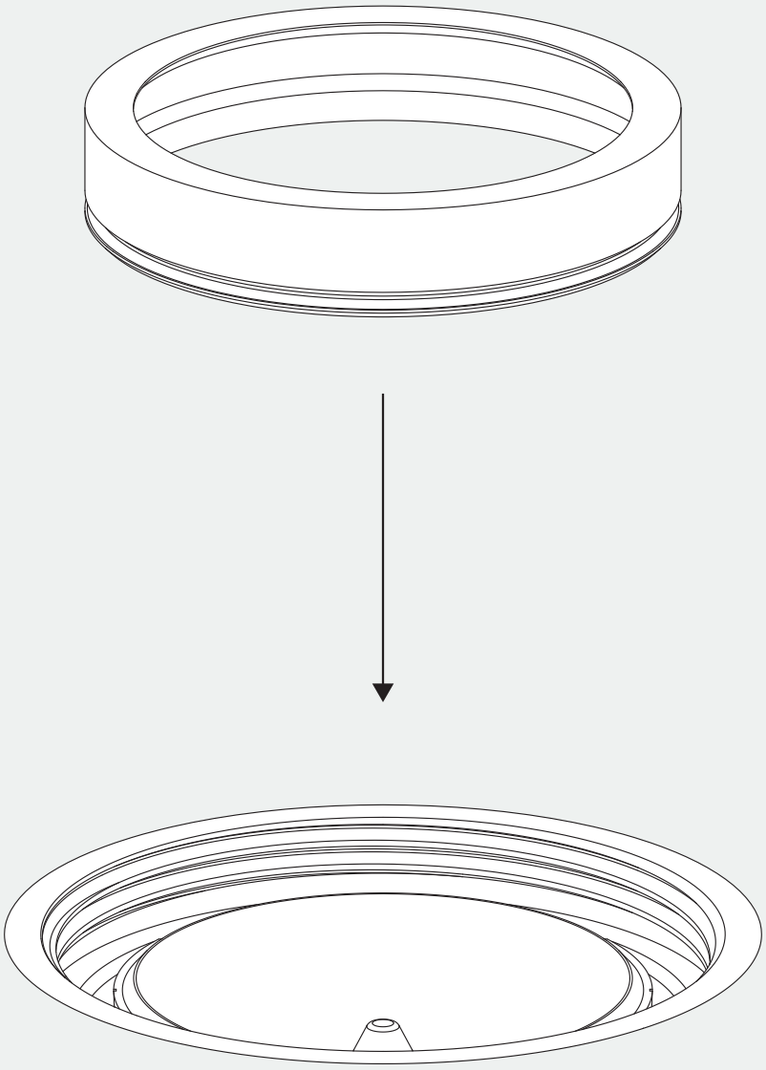

insert the showring

9

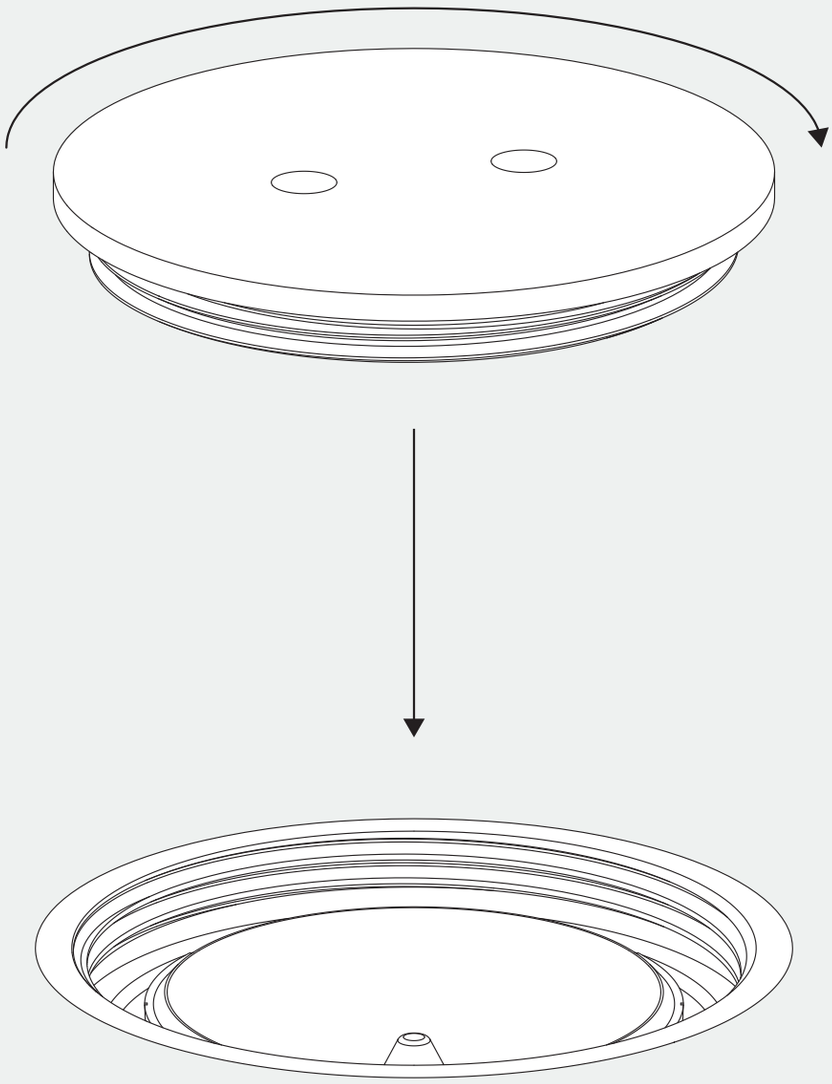

install the cover plate Ø60 of choice (sold separately)

10

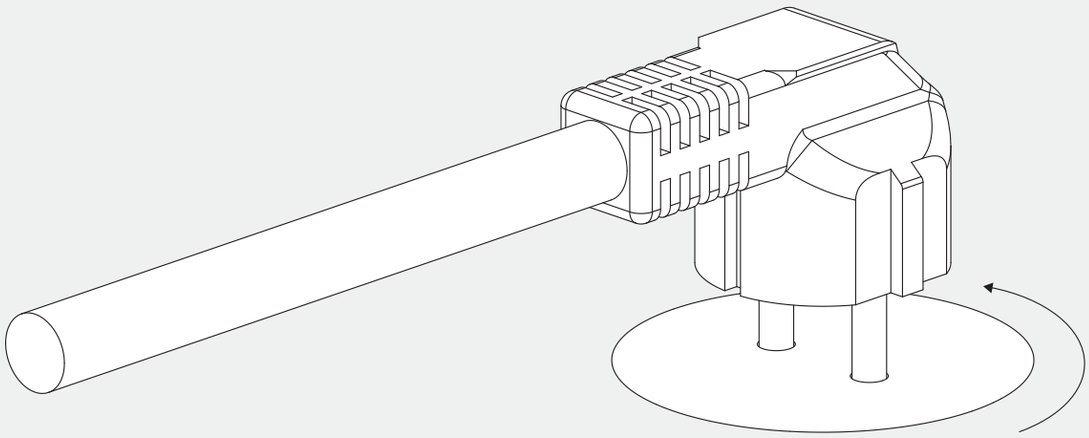

for access remove the cover plate with a plug

thank you for choosing rond

DE Oude SCHAKELAAR

Installation must be done by skilled professionals only and instructions must be followed at all times. Warranty will not apply in case of wrongful use of if unskilled personnel attempts to repair a product.